## Cartridge cavity ISO 7789–42–04–0–07

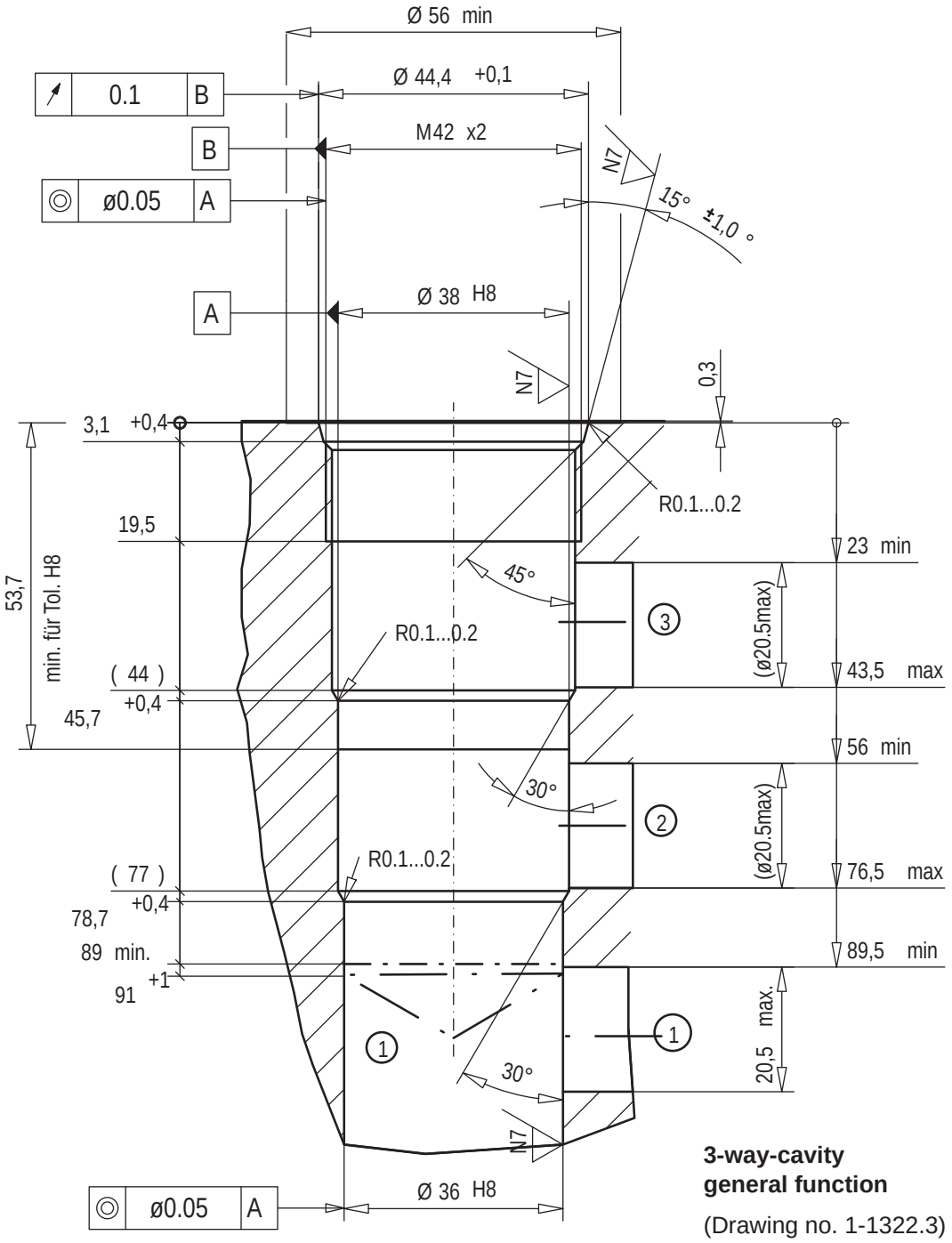


**3-way-cavity general function**

(Drawing no. 1-1322.3)

## Application

| Cartridge type: | Data sheet number: |
|---|---|
| MVPPM42-… | 2.3-690 |