Cartridge cavity

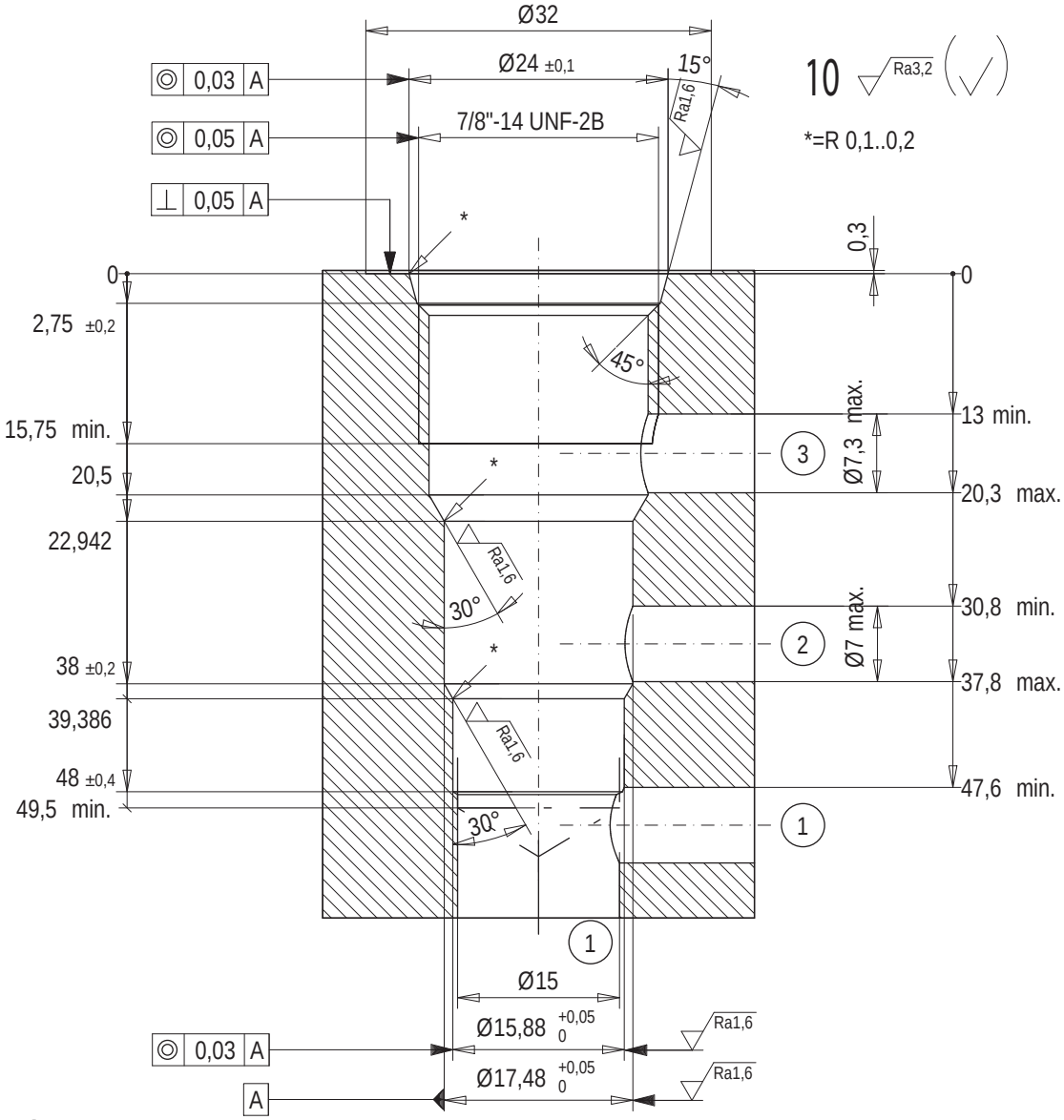

3-way-cavity

(Drawing no. 1-1344.4)

Application

Cartridge type:	Data sheet number:	Cartridge type:	Data sheet number:
MVPPU10-...	2.3-672		