Cartridge cavity CS32, CM32, CD32

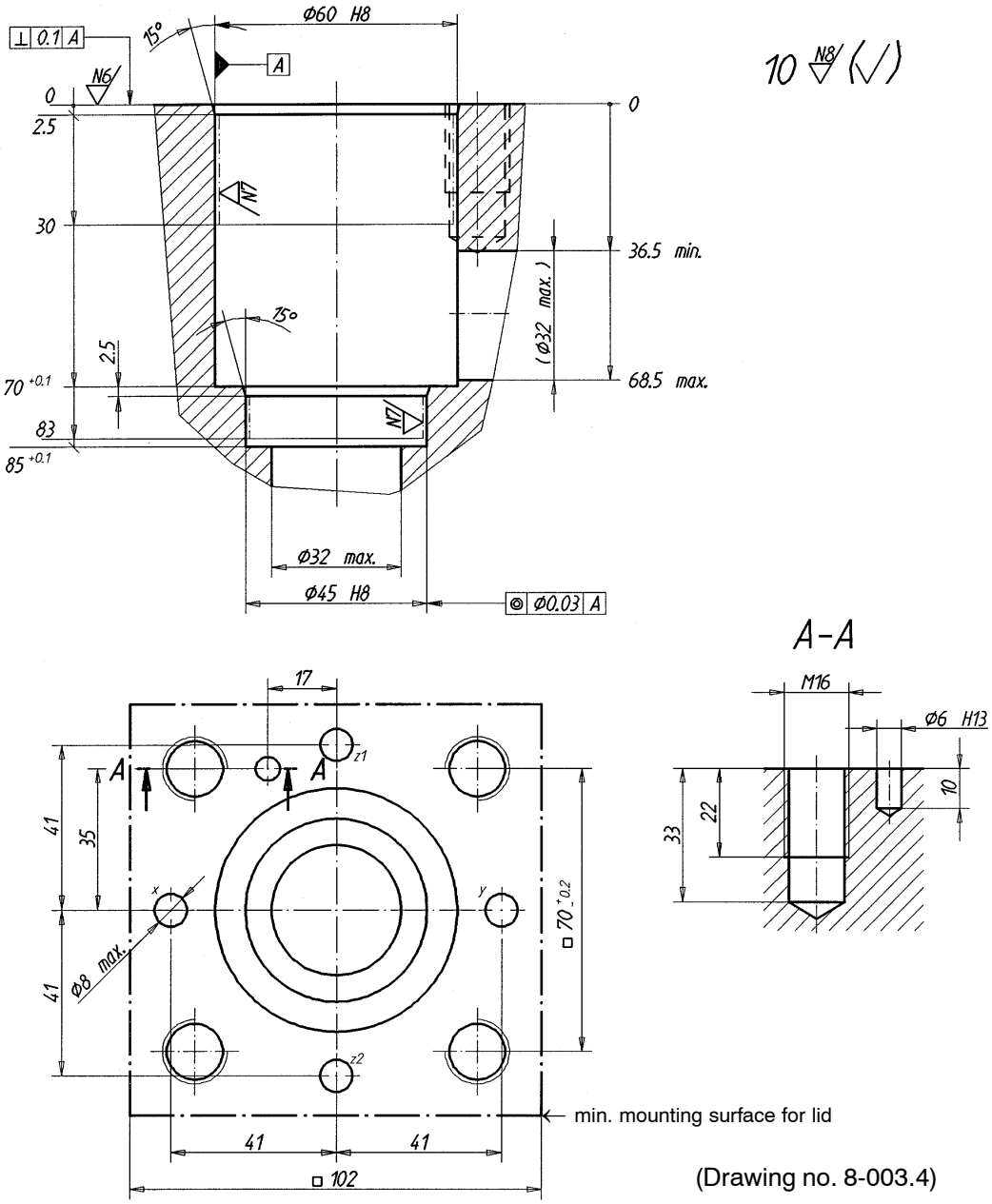

(Drawing no. 8-003.4)

Application

Cartridge type:	Data sheet number:	Cartridge type:	Data sheet number:
C.32-…	1.12-230		