Non-return valve
hydraulic pilot
Sandwich construction
- **Q_{max} = 20 l/min**
- **p_{max} = 315 bar**

NG4-Mini®

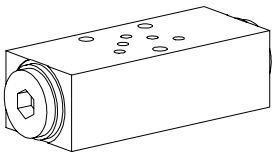

DESCRIPTION

Sandwich type non-return valve NG4-Mini with hydraulic pilot with interface according to Wandfluh standard. The valves allow a free flow in one direction and shut off in the opposite direction. 3 different standard versions are available. The steel sandwich body is phosphatised. Good performance data and attractive design are the hall marks of this quality product.

FUNCTION

In the free flow direction, the volume flow opens the valve seat against a spring. The spring helps the valve close in the opposite direction. If pressure builds up in the opposite oil port, this displaces the pilot piston and opens the non-return valve of the closed port. The pilot pressure required is dependet on the pressure held by the valve seat.

APPLICATION

Pilot operated non-return valves are used to shut off pressurised hydraulic cylinders, e.g. in lifting or clamping fixtures, without leaking. The hydraulic cylinder can olny be moved in the shut off direction if a directional valve directs the volume flow into the opposite port and releases the valve. Reliability in operation is increased ba a directional valve which connects both oil ports to the tank in the neutral position. Sandwich type elements NG4-Mini mean that the system is highly flexible and save both space and weight.

CONTENT

GENERAL SPECIFICATIONS 1
HYDRAULIC SPECIFICATIONS 1
SYMBOLS / TYPES 1
CHARACTERISTICS 2
DIMENSIONS 2
PARTS LIST 2

TYPE CODE

B [ ] 4 # [ ]

Interface

Type description for non-return valve hydraulic pilot:
In A and B DERV
In A ERVA in B ERVB

Nominal size 4-Mini

Design-Index (Subject to change)

GENERAL SPECIFICATIONS

Description	Non-return valve hydraulic pilot
Nominal size	NG4-Mini acc. to Wandfluh standard
Construction	Sandwich construction
Mounting	3 holes for hexagon socket screw M5 or studs M5
Connections	Connection plates Mulit-station flange subplate Longitudinal stacking system
Ambient temperature	-20…+50°C
Mounting position	any
Fastening torque	M_D = 5,5 Nm (Quality 8.8)
Weight	m = 0,85 kg

HYDRAULIC SPECIFICATIONS

Fluid	Mineral oil, other fluid on request
Contamination efficiency	ISO 4406:1999, class 20/18/14 (Required filtration grade ß 10…16≥75) (refer to data sheet 1.0-50)
Viscosity range	12 mm²/s…320 mm²/s
Fluid temperature	-20…+70°C
Peak pressure	p_{max} = 315 bar
Opening pressure	$p_{ö}$ = 2 bar
Pilot ratio	i = 1:8
Max. volume flow	Q_{max} = 20 l/min

SYMBOLS / TYPES

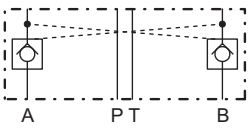

BDERV4

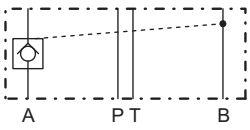

BERVA4

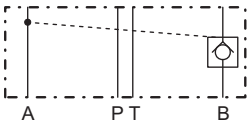

BERVB4

CHARACTERISTICS Oil viscosity υ = 30 mm²/s

$\Delta p = f(Q)$ Pressure drop charakteristic
1 Pressure drop A --> Cyl. or B --> Cyl.
2 Pressure drop Cyl. --> A or Cyl. --> B
with check valve fully open

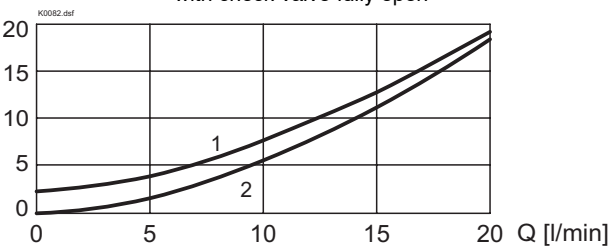

DIMENSIONS

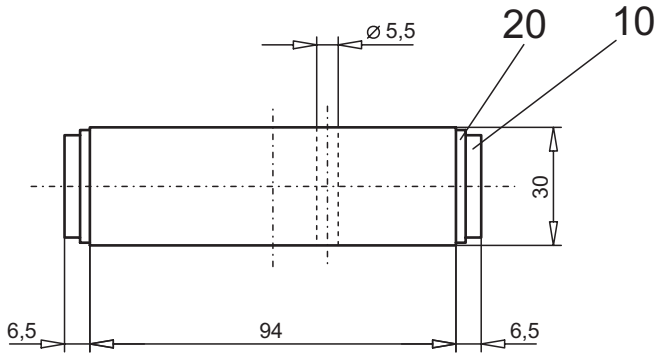

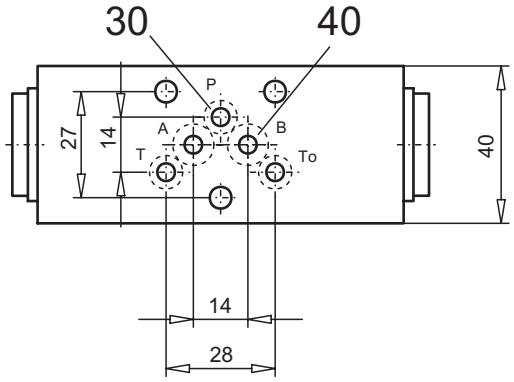

PARTS LIST

Position	Article	Description
10	239.2003	Plug G1/4"
20	49.2212	Bounded seal 21,5x28,7x2,5
30	160.2052	O-Ring ID 5,28x1,78
40	160.2076	O-Ring ID 7,65x1,78

Technical explanation see data sheet 1.0-100E