Proportional throttle valve
Screw-in cartridge construction
- **Integrated electronics**
- **Direct operated, not pressure compensated**
- **Q_{max} = 32 l/min**
- **$Q_{N\,max}$ = 25 l/min**
- **p_{max} = 350 bar**

M22x1,5
ISO 7789

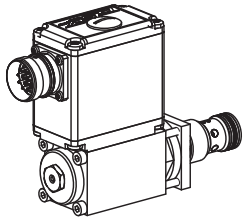

DESCRIPTION

Direct operated proportional throttle valve with integrated electronics as a screw-in cartridge with a thread M22x1,5 for cavity acc. to ISO 7789. These plug & play valves are factory set and adjusted. High valve-to-valve reproducibility. Housing for electronics with protection class IP67 for harsh environment. Three flow ranges are available. The volume flow is adjusted by a Wandfluh proportional solenoid (VDE standard 0580). A special surface coating protects the outside of the cartridge body made of steel against corrosion and reduces friction of the control spool. The solenoid is zinc coated and therefore rust-protected. The housing for the elctronics is made of aluminium.

FUNCTION

Proportionally to the command signal applied to the electronics spool stroke, metering opening and volume flow increase. The control connection is provided by an analog interface or a fieldbus interface (CANopen or Profibus DP). Parameter setting and diagnosis with the free-of-charge software «PASO» or via fieldbus interface . After taking off the cover of the electronics housing, the serial interface to adjust the settings is accessible. The menu controlled Windows program «PASO» allows easy adjustment of all variable settings. Data are stored in a non-volatile memory. Even after an electric power failure settings can easily be reproduced and transmitted.

APPLICATION

Proportional throttle valves with integrated electronics are well suited for demanding applications where high resolution, high volume flow and low hysteresis are requested. They are implemented in systems calling for good valve-to-valve reproducibility, easy installation, comfortable operation and high precision in industrial hydraulics as well as in mobile hydraulics. The proportional throttle cartridge is very suitable for mounting in control blocks, flange bodies and sandwich plates of the size NG4, NG6 and NG10. Cavity tools are available for machining the cavities in steel and aluminium (hire or purchase). Please refer to the data sheets in register 2.13.

CONTENT

TYPE CODE

D N V PM22 - ☐ - ☐ ☐ # ☐

Throttle valve		
Normally closed		
Proportional valve with integrated electronics		
Screw-in cartridge M22x1,5		
Nominal volume flow rates Q_N:	6,3 l/min	6,3
	10 l/min	10
	25 l/min	25
Standard nominal voltage U_N:	12 VDC	12
	24 VDC	24
Hardware configuration:		
With analog signal (0…+10 V factory set)		A1
With CANopen acc. to DSP-408		C1
With Profibus DP in accordance with Fluid Power Technology		P1
With CAN J1939 (on request)		J1
Design-Index (Subject to change)		

Data sheet is valid from design-index # 1 on

GENERAL SPECIFICATIONS

Description	Direct operated proportional throttle valve with integrated electronics
Construction	Screw-in cartridge for cavity acc. to ISO 7789
Operations	Proportional solenoid, wet pin push type, pressure tight
Mounting	Screw-in thread M22x1,5
Ambient temperature	-20…+65 °C (typical) (The upper temperature limit is a guideline value for typical applications, in individual cases it may also be higher or lower. The electronics of the valve limit the power in case of a too high electronics temperature. More detailed information can be obtained from the operating instructions «DSV».)
Mounting position	any
Fastening torque	M_D = 50 Nm for screw-in cartridge M_D = 2,6 Nm (Qual. 8.8) for solenoid screws
Weight	m = 0,95 kg
Flow direction	1 → 2

SYMBOL

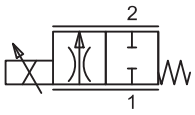

HYDRAULIC SPECIFICATIONS

Fluid	Mineral oil, other fluids on request
Contamination efficiency	ISO 4406:1999, classe 18/16/13 (Required filtration grade ß 6…10 ≥ 75) see data sheet 1.0-50/2
Viscosity range	12 mm²/s…320 mm²/s
Fluid temperature	-20...+70 °C
Peak pressure	p_{max} = 350 bar
Nominal volume flow	Q_N= 6,3 l/min, 10 l/min, 25 l/min (at Δp_N = 10 bar)
Max. volume flow	Q_{max} = 32 l/min
Leakage volume flow	see characteristic
Hysteresis	≤ 5 %

ELECTRICAL SPECIFICATIONS

Protection class	IP 67 acc. to EN 60 529 with suitable connector and closed electronics housing
Supply voltage	12 VDC or 24 VDC
Ramps	adjustable
Parameterisation	via fieldbus or USB
Interface	USB (Mini) for parameterisation with «PASO» (under the closing screw of the housing cover, factory set parameters)
Analog interface (MAIN):	
Device receptacle (male)	M23, 12-poles
Mating connector	Plug (female), M23, 12-poles (not incl. in delivery)
Preset value signal	Voltage / Current
Fieldbus-interface:	
Device receptacle supply (male)	M12, 4-poles Plug (female), M12, 4-poles (not incl. in delivery)
Device receptacle CANopen (male)	M12, 5-poles (acc. to DRP 303-1)
Mating connector	Plug (female), M12, 5-poles (not incl. in delivery)
Device receptacle Profibus (female)	M12, 5-poles, B-coded (acc. to IEC 947-5-2)
Mating connector	Plug (male), M12, 5-poles, B-coded (not incl. in delivery)
Preset value signal	Fieldbus

Note!
Detailed electrical characteristics and description of **«DSV»** electronics are shown on data sheet **1.13-75**.

START-UP

Normally there is no need to adjust settings by the customer. The connector has to be wired according to the chapter «Connector wiring diagram».

Additional information can be found on our website:
«www.wandfluh.com»

Free-of-charge download of the «PASO»-software and the instruction manual for the **«DSV»** hydraulic valves as well as the operation instruction **CANopen** eg.**Profibus DP** protocol with device profile DSP-408 for **«DSV»**.

CONNECTOR WIRING DIAGRAM

Analog interface:

Device receptacle (male) X1

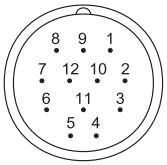

1 = Supply voltage +
2 = Supply voltage +
3 = Stabilised output voltage
4 = Preset value voltage +
5 = Preset value voltage -
6 = Preset value current +
7 = Preset value current -
8 = Reserved for extensions
9 = Reserved for extensions
10 = Enable control (Digital input)
11 = Error signal (Digital output)
12 = Chassis

Preset value voltage (PIN 4/5) resp. current (PIN 6/7) are selected with set-up and diagnosis software.
Factory setting: Voltage (0…+10 V), (PIN 4/5)

Fieldbus interface:

Device receptacle supply (male) X1

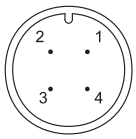

MAIN
1 = Supply voltage +
2 = Reserved for extensions
3 = Supply voltage 0 VDC
4 = Chassis

Device receptacle CANopen (male) X3

CAN
1 = not connected
2 = not connected
3 = CAN Gnd
4 = CAN High
5 = CAN Low

Device receptacle Profibus (female) X3

PROFIBUS
1 = VP
2 = RxD / TxD - N
3 = DGND
4 = RxD / TxD - P
5 = Shield

Parameterisation interface (USB, Mini B) X2
Under the closing screw of the housing cover

NOTE!
The mating connectors and the cable to adjust the settings are not part of the delivery. To order the cable, look up the article no. in the chapter «Accessories».

CHARACTERISTICS Oil viscosity ν = 30 mm²/s

Q = f (p) Volume flow pressure characteristics
(Preset value signal = 100 %)

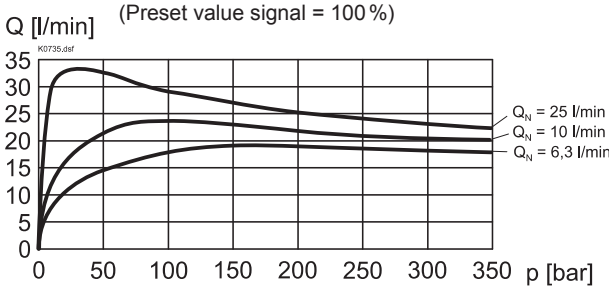

Δp = f (Q) Pressure drop volume flow characteristics

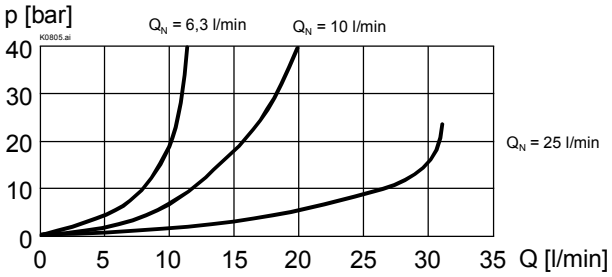

Q = f (s) Volume flow adjustment characteristics
(p1 - p2 = 30 bar) / (s corresponds to preset value signal)

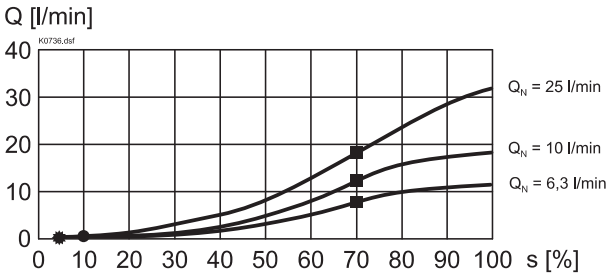

$Q_{L\,max}$ = f (p) Leakage volume flow characteristics

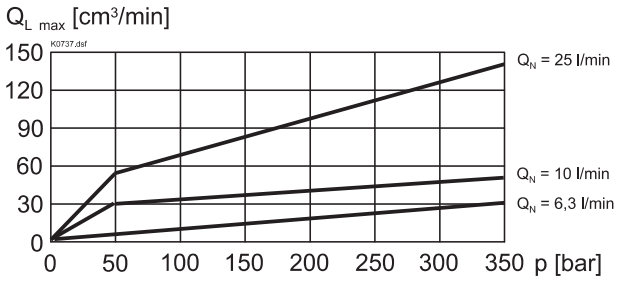

Factory settings:
Dither set for optimal hysteresis
✸ = Deadband: Solenoid switched off with command signal <5 %
● = Opening point: at 10 %
■ = Flow Δp = 30 bar with 70 % value signal
18,5 l/min with Q_N = 25 l/min
11,5 l/min with Q_N = 10 l/min
7,5 l/min with Q_N = 6,3 l/min

DIMENSIONS / SECTIONAL DRAWINGS

With analog interface

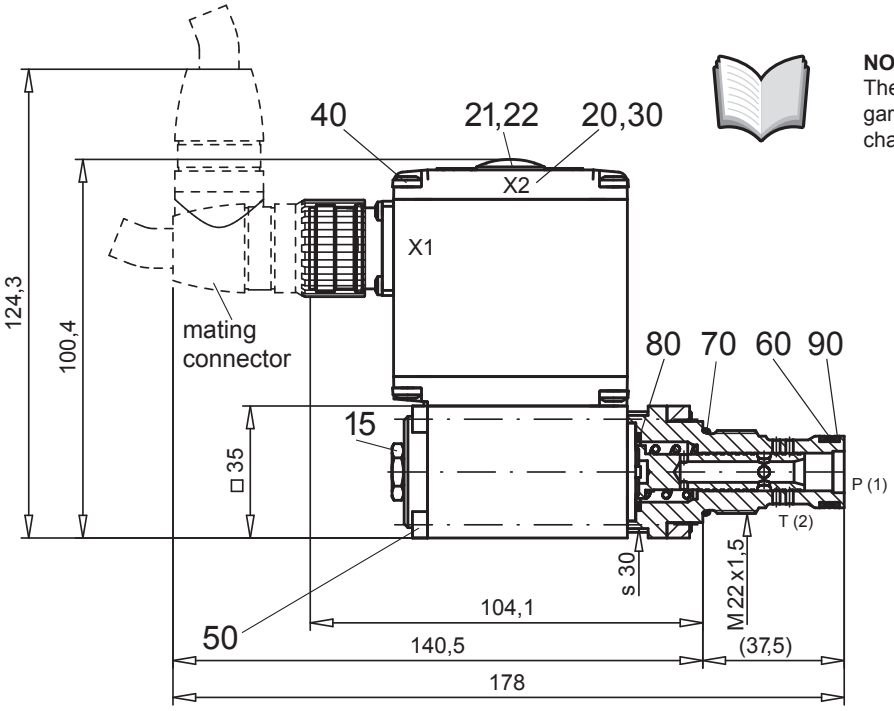

NOTE!
The cable connector is not part of the delivery. Regarding the dimensions see also the connector in the chapter «Accessories».

DIMENSIONS / SECTIONAL DRAWINGS

With fieldbus interface

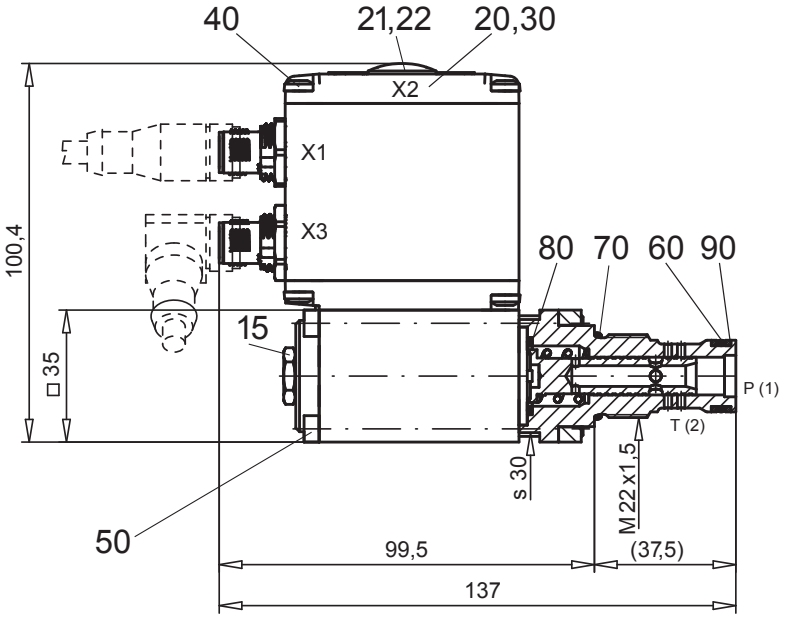

Cavity drawing according to
ISO 7789–22–01–0–98

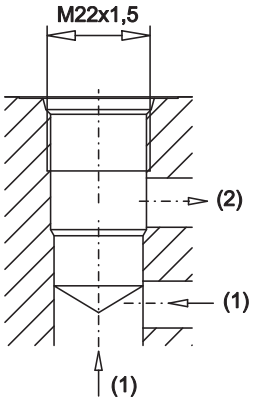

For detailed cavity drawing
and cavity tools
see data sheet 2.13-1008

PARTS LIST

Position	Article	Description
15	253.8000	Mounted screw with integrated manual override HB4,5
20	062.0102	Cover
21	223.1317	Dummy plug M16 x 1,5
22	160.6131	O-ring ID 13,00 x 1,5
30	072.0021	Gasket 33 x 2 x 59,9 x 2
40	208.0100	Stocket head cap screw M4 x 10
50	246.1171	Pan head screw M4 x 70 DIN 912
60	160.2156	O-ring ID 15,60 x 1,78
70	160.2188	O-ring ID 18,77 x 1,78
80	160.2170	O-ring ID 17,17 x 1,78
90	049.3196	Back-up ring RD 16,1 x 19 x 1,4

ACCESSORIES

- Cartridge built-in:
  – flange and sandwich bodies — see register 2.3
- Set-up software — see start-up
- Cable to adjust the settings through interface USB
  (from plug type A to Mini B, 3 m) — article no. 219.2896
- Cable connector for analog interface:
  – straight, soldering contact — article no. 219.2330
  – 90°, soldering contact — article no. 219.2331
  Recommended cable size:
  – Outer diameter 9…10,5 mm
  – Single wire max. 1 mm²
  – Recommended wire size
    0…25 m = 0,75 mm² (AWG18)
    25…50 m = 1 mm² (AWG17)

Technical explanation see data sheet 1.0-100E