2-way flow control valve
Adjustable orifice, fixed pressure compensator
Screw-in cartridge

- Q_{max} = 80 l/min
- $Q_{N\,max}$ = 70 l/min
- p_{max} = 350 bar

M33x2
ISO 7789

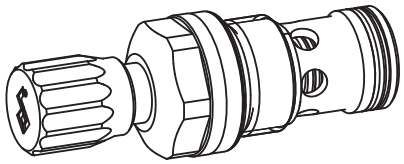

DESCRIPTION
2-way screw-in cartridge-type flow control valve with M33x2 thread, for pressure cavity acc. to ISO 7789. The valve is available in 2 different setting versions: Spanner setting „S“ and turning knob „D“. In its standard form, this control valve can be supplied with two nominal volume flow ranges. The two part cartridge body is made of steel. The surface of the valve is zinc-coated or rust protection.

FUNCTION
The 2-way flow control valve is designed to keep the speed of a consumer constant irrespective of the load. The adjustable measuring orifice determines the volume flow. If there is a pressure change, the pressure compensating spool is displaced and changes the outlet diameter in order to keep the pressure difference on the measuring orifice constant.

APPLICATION
For use in all hydraulic systems where the supply volume flow needs to be kept constant even when the load fluctuates. Installation of the screw-in cartridge in control blocks as well as in the Wandfluh sandwich plates (vertical stakked systems) and flange valves. (Please note the separate data sheets in register 2.5). Cavity tools are available for machining cavities (hire or purchase). Please refer to the data sheets in register 2.13.

CONTENT

TYPE CODE

QZ ☐ PM33 - ☐ # ☐

Flow control valve 2-way		
Setting versions: Screw	S	
Turning knob	D	
Cover	A	(see data sheet 2.0-50)
Screw-in cartridge M33x2		
Standard nominal flow rates:	Q_N = 32 l/min	32
	Q_N = 70 l/min	70
Design-Index (Subject to change)		

GENERAL SPECIFICATIONS

Denomination	Flow control valve 2-way
Construction	Screw-in cartridge for cavity acc. to ISO 7789
Mounting	Screw-in thread M33x2
Ambient temperature	-20…50° C
Mounting position	any
Fastening torque	M_D = 80 Nm
Weight:	m = 0,39 kg (screw)
	m = 0,40 kg (knob)
Volume flow direction:	1 → 2 adjustable flow

HYDRAULIC SPECIFICATIONS

Fluid	Mineral oil, other fluid on request
	ISO 4406:1999, class 18/16/13
Contamination efficiency	(Required filtration grade ß 6...10 ≥ 75)
	refer to data sheet 1.0-50/2
Viscosity range	12 mm²/s…320 mm²/s
Fluid temperature	-20...+70° C
Peak pressure	p_{max} = 350 bar
Nominal volume flow rates:	Q_N = 32 l/min, 70 l/min,
Min. volume flow	Q_{min} = 0,2 l/min (ν = 30 mm²/s)
Max. volume flow	Q_{max} = 85 l/min
Control accuracy	≤ 1 %

SYMBOLS

simplified

detailed

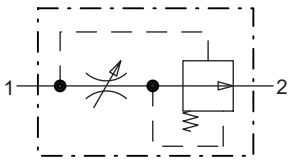

MECHANICAL ACTUATION

Mechanical types of operation in 3 different versions:

S	= Screw adjustment with fork wrench and Allen key
D	= knob
Control stroke S_b	= 4 mm
Control angle α_b	= 1440° (4 turns)

CHARACTERISTICS Oil viscosity ν = 30 mm²/s

Q = f (p) Volume flow pressure characteristic

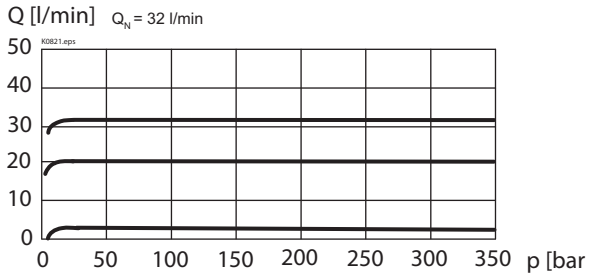

Q = f (n) Volume flow adjustment characteristic (p = 350 bar)

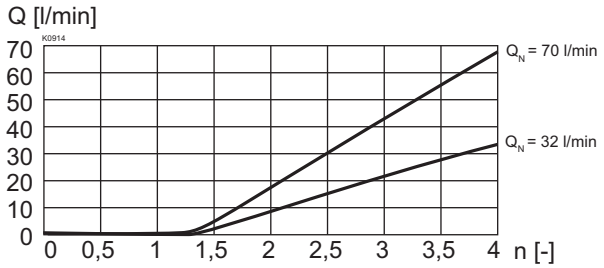

Q = f (p) Volume flow pressure characteristic

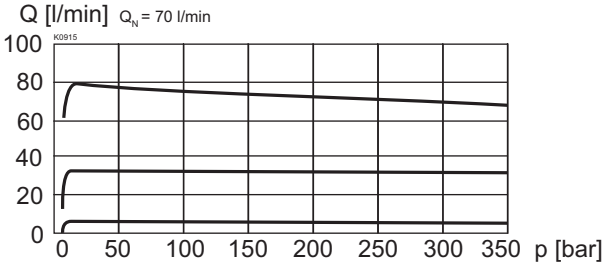

Q_L = f (p) Leakage volume flow characteristic

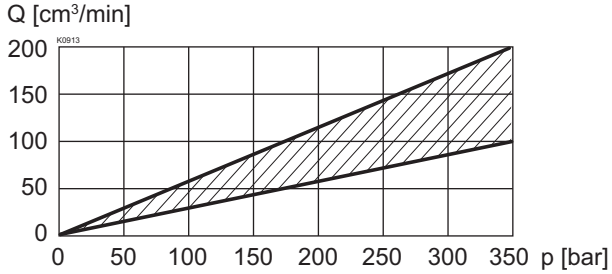

DIMENSIONS

Screw adjustment „S“

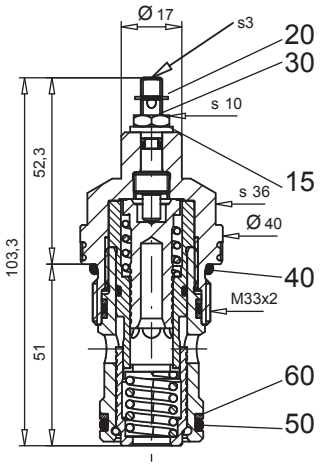

Knob adjustment „D“

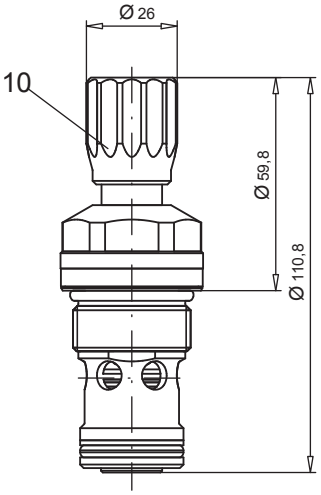

Cavity drawing acc. to
ISO 7789–33–01–0–98

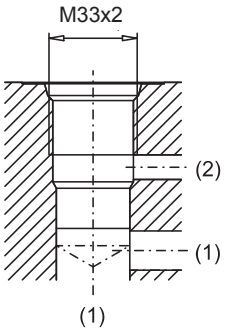

For cavity details and cavity tools, see data sheet 2.13-1005.

PARTS LIST

Position	Article	Description
10	114.2299	Knob
15	234.1060	Plate
20	193.1040	Safety plate RD4 DIN 6799
30	153.1302	Hexagonal nut 0,5D M6x3,2
40	160.2298	O-ring ID 29,82x2,62
50	160.2238	O-ring ID 23,81x2,62
60	049.3297	Back-up ring RD 24,5x29x1,4

ACCESSOIRES

Cartridge built-in flange- or sandwich plates
Flange/Sandwich valves Register 2.5

Technical explanation see data sheet 1.0-100E