Solenoid poppet valve cartridge
2/2-way version
- **Pilot operated**
- **Q_{max} = 80 l/min**
- **p_{max} = 350 bar**

M22x1,5
ISO 7789

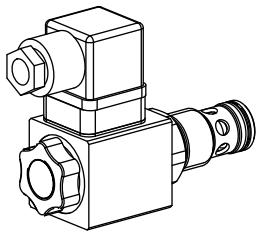

DESCRIPTION
Pilot operated 2/2-way poppet valve in screw-in cartridge design with thread M22x1,5 for cavity according to ISO 7789. The valve functions «normally open-CB» and «normally closed-BC» are available. The actuating takes place by means of a solenoid. This can be rotated through 360° and is replaceable without opening the hydraulic system. All components located on the outside are zinc coated and thus protected against rust.

FUNCTION
• «Current-free open -CB»
In case of a current-free solenoid, it is possible for the flow to pass through the valve in both directions. In case of a solenoid under current, the valve is blocked from connection 2 to 1. If, however, the pressure in connection 1 rises above the solenoid power, the valve opens.

• «Current-free closed -BC»
In case of a current-free solenoid, the valve is blocked from connection 2 to 1. If, however, the pressure in connection 1 is higher than in connection 2, the valve opens. In case of a solenoid under current, it is possible for the flow to pass through the valve in both directions.

APPLICATION
Wandfluh solenoid operated poppet valves are applied where an absolutly leak free closing of the valve is essential like in load holding, clamping or gripping functions. The solenoid operated screw-in cartridges are mainly used in mobile or stationary integrated blocks. To machine the cavities, cavity tools may be supplied (hire or purchase). Please refer to the data sheets in register 2.13.

TYPE CODE

S V S PM22 - [ ] - [ ] / M [ ] 35 # [ ]

- Poppet valve
- Pilot operated
- Super
- Screw-in cartridge M22x1,5
- 2/2-way, «normally closed» [BC]; 2/2-way, «normally open» [CB]
- Standard-nominal voltage U_N: 12 VDC [G12], 24 VDC [G24]; 110 VAC [R110], 115 VAC [R115], 230 VAC [R230]
- Slip-on coil made of steel
- Connector socket: EN 175301-803 / ISO 4400 [D]; AMP Junior-Timer [J]; Stranded conductor (length = 500 mm) [L] } only for execution DC
- Coil type
- Design-Index (Subject to change)

GENERAL SPECIFICATIONS

Description	Pilot operated 2/2-way solenoid poppet valve
Construction	Screw-in cartridge for cavity acc. to ISO 7789
Operation	Solenoid with exchangable slip-on coil
Mounting	Screw-in thread M22x1,5
Ambient temperature	-20...+50 °C 100% DF -20...+70 °C 40% DF/5 min (see characteristics)
Mounting position	any
Fastening torque	M_D = 50 Nm for cartridge $M_{D\,max}$ = 5 Nm for coil retaining nut
Weight	m = 0,45 kg
Volume flow	see symbols

HYDRAULIC SPECIFICATIONS

Fluid	Mineral oil, other fluid on request
Contamination	ISO 4406:1999, classe 20/18/14
Efficiency	(Required filtration grade ß10…16≥75) see data sheet 1.0-50/2
Viscosity range	12 mm²/s…320 mm²/s
Fluid temperature	-20…+70 °C
Working pressure	p_{max} = 350 bar
Nominal flow	Q_N = 80 l/min
Pressure drop	see characteristics

SYMBOLS

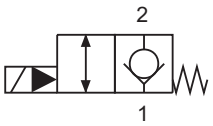

SVSPM22-BC…

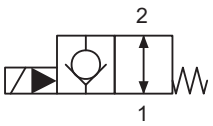

SVSPM22-CB…

ELECTRICAL CONTROL

Construction	Solenoid, wet pin, pull or push type, pressure tight with exchangable slip-on coil
Standard nominal voltage:	U_N = 12 VDC, 24 VDC U_N = 110 VAC∗, 115 VAC∗, 230 VAC∗ AC = 50 up to 60 Hz

– ∗ Rectifier integrated in connector socket
– Other nominal voltages and wattages on request

Voltage tolerance	±10 % of nominal voltage
Protection class	IP 65 acc. to EN 60 529 (if correctly mounted)
Relative duty cycle (DF)	100% DF ambient temperature to 50 °C 40% DF ambient temperature to 70 °C (see characteristics)
Operating life	10^7 (number of switching cycles, theoretically)
Connections/Power supply	Versions see type code
Solenoid type:	
- Steel coil (M.35/16x40)	data sheet 1.1-171

CHARACTERISTICS Oil viscosity υ = 30 mm²/s

p = f (Q) Performance limits at 10% under voltage and max. ambient temperature

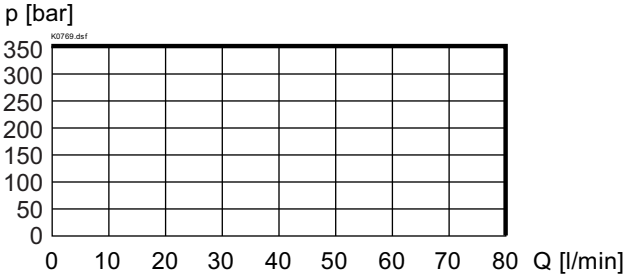

Δp = f (Q) Pressure volume flow characteristics

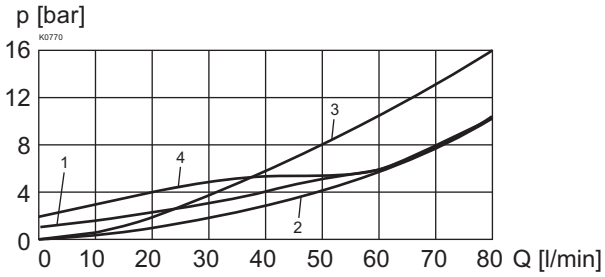

Relative duty factor = f (Ambient temperature)

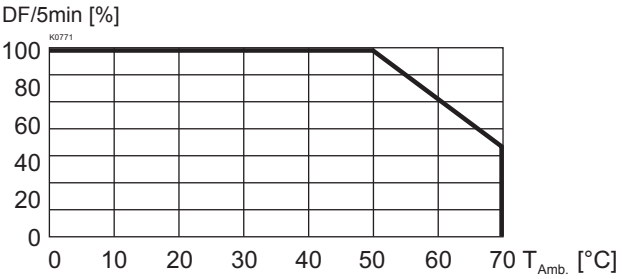

		BC	CB
Current-free	1 → 2	1	2
Current-free	2 → 1	–	3
under current	1 → 2	2	4
under current	2 → 1	3	–

DIMENSIONS / SECTIONAL DRAWING

with DIN connector socket

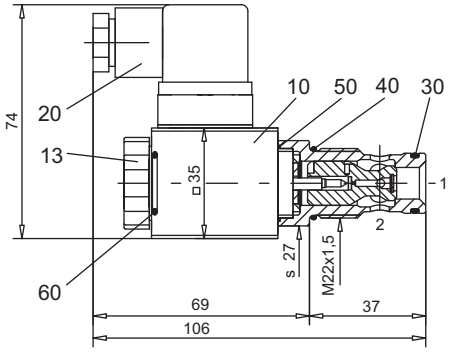

with Junior-Timer connector socket

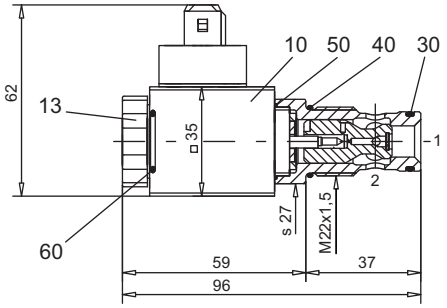

Stranded conductor version

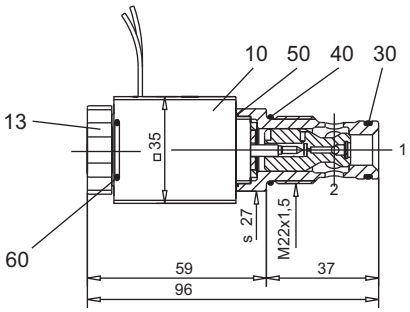

CAVITY

Cavity drawing acc. to
ISO 7789–22–01–0–98

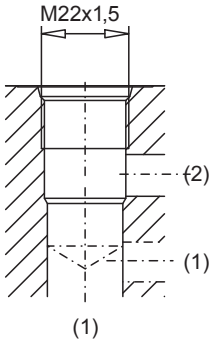

For detailed cavity drawing and cavity tools
see data sheet 2.13-1008

PARTS LIST

Position	Article	Description
10	260.4…	Coil complete M.35/16x40
13	154.2600	Knurled nut M16x1x9
20	219.2002	Plug
30	160.0157	O-ring polyurethane ID 15,60x1,78
40	160.2188	O-ring ID 18,77x1,78
50	160.1220	O-ring ID 22,00x1,00
60	160.2156	O-ring ID 15,60x1,78

ACCESSORIES

Cartridge built-in flange- or sandwich body

Flange valve	register 1.11
Sandwich valve	register 1.11

Technical explanation see data sheet 1.0-100