Solenoid poppet valve cartridge
2/2- and 3/2-way version
- **Direct operated**
- **Q_{max} = 20 l/min**
- **p_{max} = 350 bar**

M18x1,5
ISO 7789

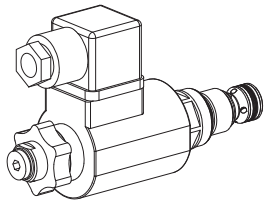

DESCRIPTION

Direct operated 2/2- and 3/2-way poppet valve in screw-in cartridge with thread M18 x 1,5 for cavity to ISO 7789, (3/2-way type to Wandfluh standard). The 2/2-way type can be supplied in a „normally closed“ and „normally open“ version. There are two versions of the slip-on coil. The coil type „M“ with steel housing and the more economical type „K“ with plastic moulded coil with the same performance as the steel type. The coil may be exchanged without opening the hydraulic circuit. The outside of the armature tube and the valve body are zinc coated for surface protection.

FUNCTION

The pressure tight switching solenoid and in turn the spring on the opposite side shift the guided poppet into an either open or closed position. Due to the equal-area- and balanced-poppet-design there are no undesired opening or closing forces. Fluid may pass the poppet valve in both directions. The poppet piston is sealed by an o-ring. The seat with metallic seal closes leak free in both directions.

APPLICATION

Wandfluh solenoid operated poppet valves are applied where an absolutly leak free closing of the valve is essential like in load holding, clamping or gripping functions. The solenoid operated screw-in cartridges are mainly used in mobile or stationary integrated blocks. To machine the cavities in steel or aluminium blocks cavity tools may be supplied (hire or purchase). Please refer to the data sheets in register 2.13

CONTENTS

TYPE CODE

S D S PM18 - [ ] - [ ] / [ ] [ ] 35 # [ ]

- Poppet valve
- Direct operated
- Super
- Screw-in cartridge M18 x 1,5
- 2/2-way, „normally closed“ BA; 2/2-way, „normally open“ AB; 3/2-way FG
- Standard-nominal voltage U_N: 12 VDC G12, 24 VDC G24; 110 VAC R110, 115 VAC R115, 230 VAC R230
- Slip-on coil: Plasic moulded K, Steel M (only for 12 VDC and 24 VDC available)
- Connector socket: ISO 4400 / DIN 43650 D, AMP Junior-Timer J
- Coil types
- Design-Index (Subject to change)

GENERAL SPECIFICATIONS

Description	Direct operated 2/2- and 3/2-way solenoid poppet valve
Construction	Screw-in cartridge for cavity to ISO 7789 (3/2-way type to Wandfluh standard)
Operation	Solenoid with exchangable slip-on coil
Mounting	Screw-in thread M18 x 1,5
Ambient temperature	-20...+50 °C
Mounting position	any
Fastening torque	M_D = 30 Nm for cartridge $M_{D\,max}$ = 5 Nm or coil retaining nut
Masse	m = 0,43 kg version with plastic coil m = 0,57 kg version with steel coil
Volume flow	any (note performance limits)

HYDRAULIC SPECIFICATIONS

Fluid	Mineral oil, other fluid on request
Contamination efficiency	ISO 4406:1999, classe 20/18/14 (Required filtration grade ß10…16≥75) see data sheet 1.0-50/2
Viscosity range	12 mm²/s…320 mm²/s
Fluid temperature	-20…+70 °C
Working pressure	p_{max} = 350 bar
Nominal flow	Q_N =15 l/min
Max. volume flow	Q_{max} = up to 20 l/min
Pressure drop	Δp = < 16 bar with 15 l/min

SYMBOLS

SDSPM18-BA…

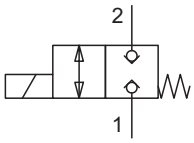

SDSPM18-AB…

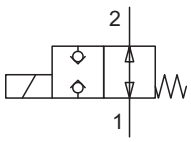

SDSPM18-FG…

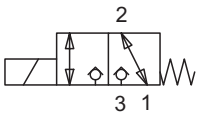

Transitional function „FG“

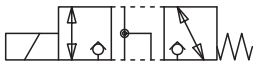

ELECTRICAL CONTROL

Construction	solenoid, wet pin, push type, pressure tight with exchangable slip-on coil
Standard nominal voltage:	U_N = 12 VDC, 24 VDC U_N = 110 VAC∗, 115 VAC∗, 230 VAC∗ AC = 50 up to 60 Hz ∗ Rectifier integrated in connector socket Other nominal voltages and wattages on request
Voltage tolerance	±10% of nominal voltage
Protection class	IP 65 acc. to EN 60529 (if correctly mounted)
Relative duty cycle	100% DF (see data sheet 1.1-430)
Switching cycles	5000/h
Operating life	10^7 (number of switching cycles, theoretically)
Connections / Power supply	Versions see type code
Solenoid type:	
– Steel coil (M.35/16)	data sheet 1.1-170
– Plastic coil (K.35/16)	data sheet 1.1-172

CHARACTERISTICS oil viscosity υ = 30 mm²/s

p = f (Q) Performance limits at 10% under voltage and max. ambient temperature 2/2-way type, „normally closed“ [BA]

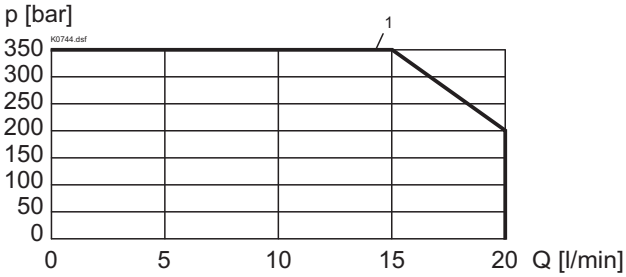

	Flow direction	
Version	1 → 2	2 → 1
SDSPM18-BA-…/„**M**“	1	1
SDSPM18-BA-…/„**K**“	1	1

p = f (Q) Performance limits at 10% under voltage and max. ambient temperature 2/2-way type, „normally open“ [AB]

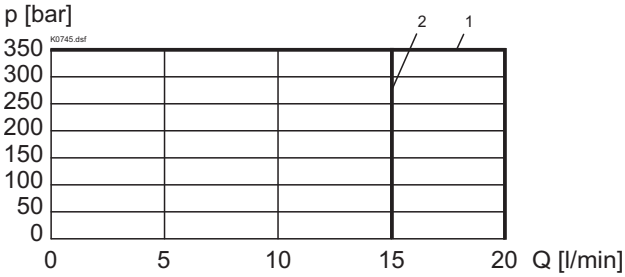

	Flow direction	
Version	1 → 2	2 → 1
SDSPM18-AB-…/„**M**“	2	1
SDSPM18-AB-…/„**K**“	2	1

p = f (Q) Performance limits at 10% under voltage and max. ambient temperature 3/2-way type [FG]

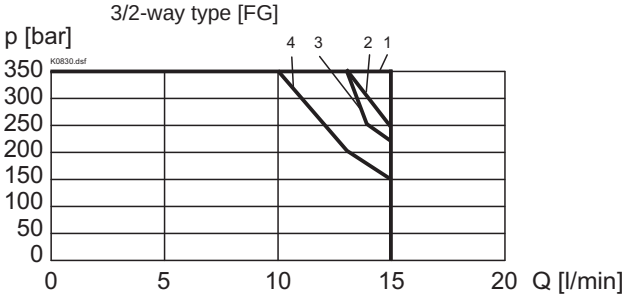

	Flow direction			
Version	1 → 2	2 → 1	2 → 3	3 → 2
SDSPM18-FG-…/„**M**“	3	1	1	2
SDSPM18-FG-…/„**K**“	3	1	1	4

Δp = f (Q) Pressure volume flow characteristics

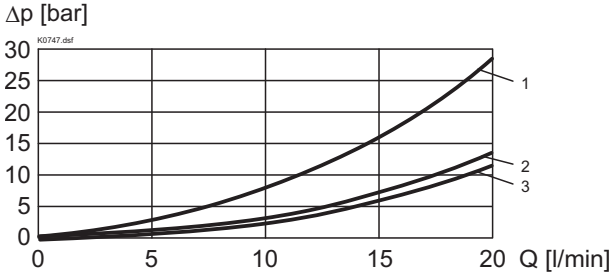

	Flow direction		
Version	1 → 2	2 → 1	3 → 2
SDSPM18-BA-…	2	2	–
SDSPM18-AB-…	2	2	–
SDSPM18-FG-…	–	3	1

REMARK!
Depending on application the volume flow may be increased but during shifting the total volume flow (3 → 2 and 2 → 1) must not be higher than Q = 20 l/min

DIMENSIONS / SECTIONAL DRAWING

2/2-way version, „normally closed“ [BA]
with DIN connector socket

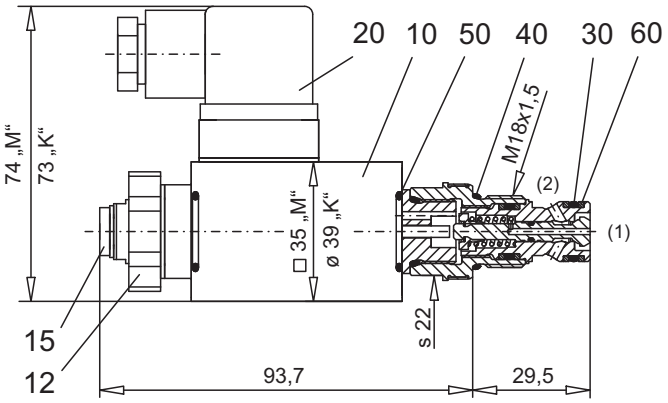

2/2-way version, „normally closed“ [BA]
with Junior-Timer connector socket

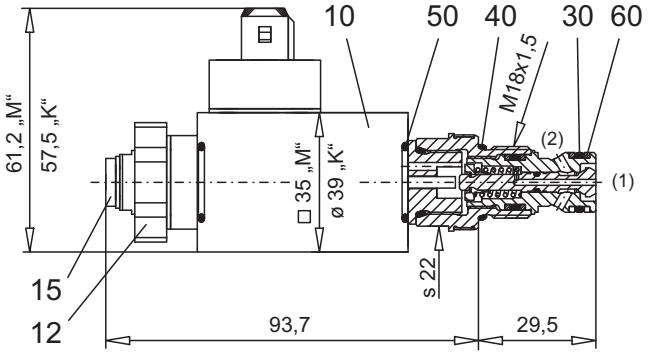

2/2-way version „normally open“ [AB]
with DIN connector socket

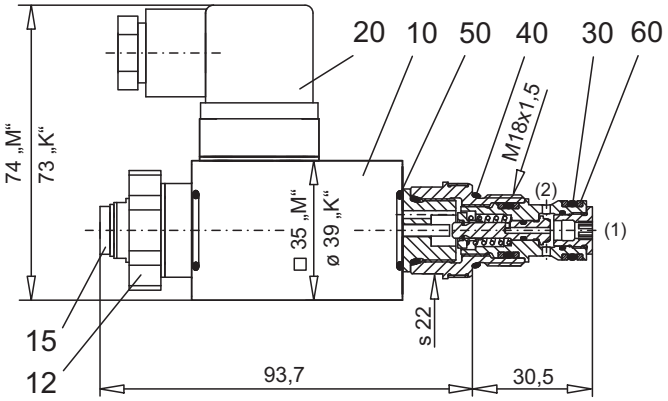

2/2-way version, „normally open“ [AB]
with Junior-Timer connector socket

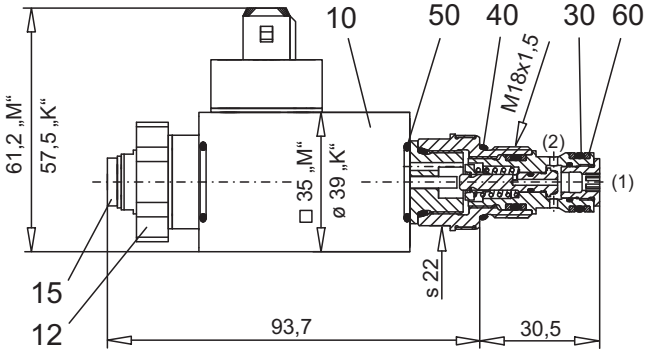

CAVITY

Cavity drawing for 2/2-way version
to ISO 7789–18–01–0–98

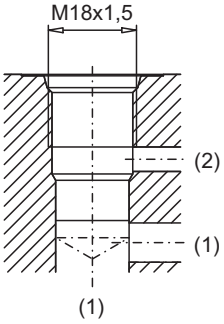

For detailed cavity drawing and cavity tools
see data sheet 2.13-1002

DIMENSIONS / SECTIONAL DRAWING

3/2-way version
with DIN connector socket

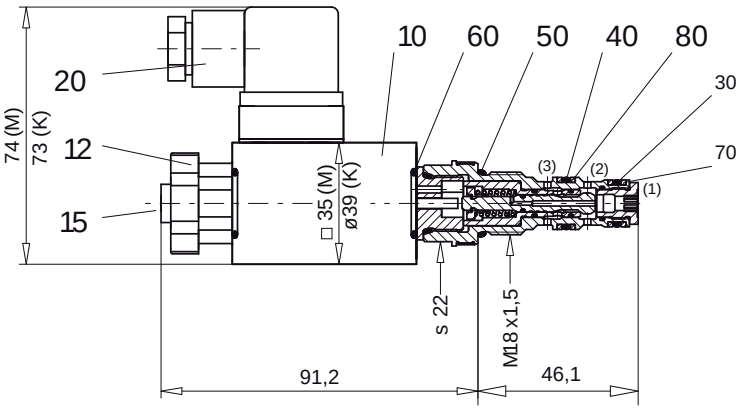

CAVITY

Cavity drawing for 3/2-way version
to Wandfluh standard

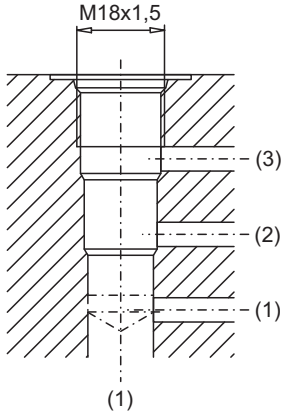

For detailed cavity drawing and cavity tools
see data sheet 2.13-1020

3/2-way version
with Junior-Timer connector socket

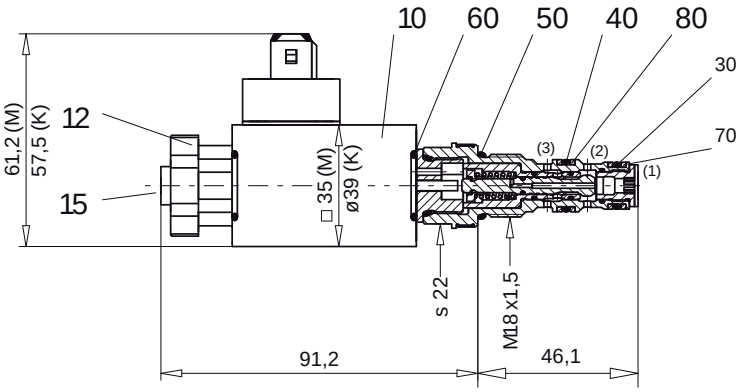

PARTS LIST

Position	Article	Description
10	260.4… 260.4… 206.23.. 206.23..	Coil complete MD35/16-… Coil complete MJ35/16-… Coil complete KD35/16-… Coil complete KJ35/16-…
12	154.2601	Knurled nut M16 x 1 x 18
15	239.2033	Plug HB0 (incl. seal)
20	219.2002	Plug
25	160.2093	O-ring ID 9,25 x 1,78
30	160.2111	O-ring ID 11,11 x 1,78
40	160.2156	O-ring ID 15,60 x 1,78
50	160.6156	O-ring viton ID 15,60 x 1,78
55	049.3137	Back-up ring RD 10,6 x 13,5 x 1,4
60	049.3156	Back-up ring RD 12,1 x 15 x 1,4

ACCESSORIES

Cartridge built-in flange- or sandwich body

Flange valve	on request
Sandwich valve	on request

Technical explanation see data sheet 1.0-100