Solenoid poppet valve cartridge
2/2-way versions

- **Pilot operated**
- **Q_{max} = 150 l/min**
- **p_{max} = 350 bar**

M33x2
ISO 7789

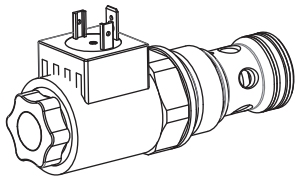

DESCRIPTION

Pilot operated 2/2-way poppet valve in screw-in cartridge design with thread M33x2 for cavity acc. to ISO 7789. The valve functions „normally open“ and „normally closed“ are available. There are two versions of the slip-on coil. The coils may be exchanged without opening the hydraulic circuit. The outside of the armature tube and the valve body are zinc coated for surface protection.

FUNCTION

In case of the version CB, the valve is closed in the flowing condition, in case of the BC in the non-flowing condition. In this, the differential spool is pressed against the seat by means of a spring and the applied pressure, and it closes free of leakage oil from 2 to 1. In the opposite direction of flow, the valve opens after reaching the opening pressure. In case of the version AB, the valve is closed in the flowing condition, in case of the BA in the non-flowing condition. In this, the differential spool is pressed against the seat by means of a spring and the applied pressure, and it closes free of leakage oil in both directions of flow.

APPLICATION

Wandfluh solenoid operated poppet valves are applied where a leak free closing of the valve is essential like in load holding, clamping or gripping functions. The solenoid operated screw-in cartridges are mainly used in mobile or stationary integrated blocks and in size NG10 flange and sandwich bodies. To machine the cavities in steel or aluminium blocks cavity tools may be supplied (hire or purchase). Please refer to the data sheets in register 2.13

CONTENT

TYPE CODE

S V S PM33 - ☐ - ☐ / ☐ ☐ - ☐ # ☐

- Poppet valve
- Pilot operated
- Super
- Screw-in cartridge M33x2
- Designation see symbols
- Standard-nominal voltage U_N: 12 VDC G12, 24 VDC G24, 115 VAC R115, 230 VAC R230, without solenoid coil X5
- Slip-on coil: Metal housing, round W; Metal housing, square M
- Connector socket: ISO 440 / DIN 43650 D; AMP Junior-Timer J
- Sealing material: NBR (☐); FKM (Viton) D1
- Design-Index (Subject to change)

GENERAL SPECIFICATIONS

Description	Pilot operated 2/2-way solenoid poppet valve
Construction	Screw-in cartridge for cavity acc. to ISO 7789
Operation	Solenoid with exchangable slip-on coil
Mounting	Screw-in thread M33x2
Ambient temperature	-20…+50 °C
Mounting position	any
Fastening torque:	M_D = 80 Nm for cartridge
	$M_{D\,max}$ = 5 Nm for coil retaining nut
Weight:	m = 0,7 kg
Volume flow	see symbols

HYDRAULIC SPECIFICATIONS

Fluid	Mineral oil, other fluid on request
Contamination	ISO 4406:1999, class 20/18/14
efficiency	(Required filtration grade ß 10...16 ≥ 75)
	(see data sheet 1.0-50/2)
Viscosity range	12 mm²/s…320 mm²/s
Fluid temperature	-20…+70 °C
Working pressure	p_{max} = 350 bar
Max. volume flow	Q_{max} = 150 l/min
Pressure drop	Δp_{max} = < 10 bar with 100 l/min
Opening pressure:	
Version CB / BC	2 → 1 = 2 bar / 1 → 2 = 1,5 bar
Version AB / BA	2 → 1 = 3 bar / 1 → 2 = 3 bar

SYMBOLS

SVSPM33 - **BC**…

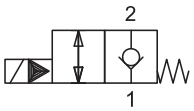

SVSPM33 - **CB**…

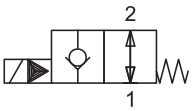

SVSPM33 - **BA**…

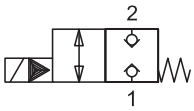

SVSPM33 - **AB**…

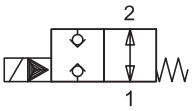

ELECTRICAL CONTROL

Construction	Switching solenoid, wet pin pull- or push type, pressure tight
Standard nominal voltage:	U_N = 12 VDC, 24 VDC U_N = 115 VAC∗, 230 VAC∗ AC = 50 bis 60 Hz

– ∗ Rectifier integrated in connector socket
– Other nominal voltages and wattages on request

Voltage tolerance	±10 % of nominal voltage
Protection class	IP 65 acc. to EN 60 529 (if correctly mounted)
Relative duty cycle	100 % DF (see data sheet 1.1-430)
Switching cycles	5'000 /h
Operating life	10^7 (number of switching cycles, theoretically)
Connections/Power supply	Versions see type code
Solenoid type:	
- Metal housing, round (W.E37 / 16)	Datenblatt 1.1-169
- Metal housing, square (M.E 35 / 16)	Datenblatt 1.1-171

CAVITY

Cavity drawing to
ISO 7789–33–01–0–98

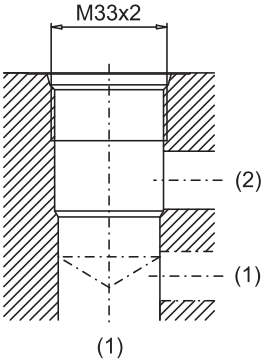

For detailed cavity drawing and
cavity tools see data sheet 2.13-1005

CHARACTERISTICS Oil viscosity ν = 30 mm²/s

p = f (Q) Performance limits at 10% under voltage and max. ambient temperature

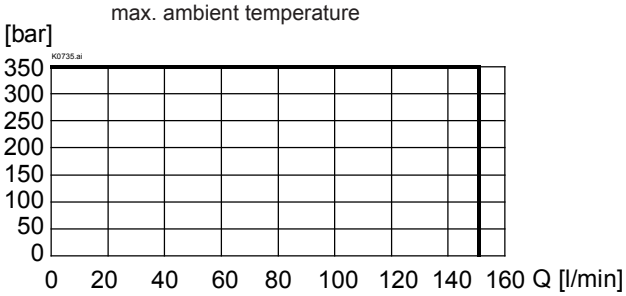

Δp = f (Q) Pressure volume flow characteristics [BC / CB]

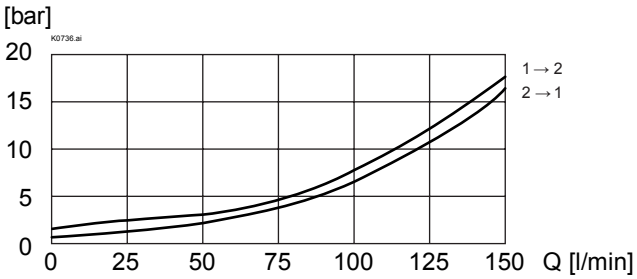

Δp = f (Q) Pressure volume flow characteristics [BA / AB]

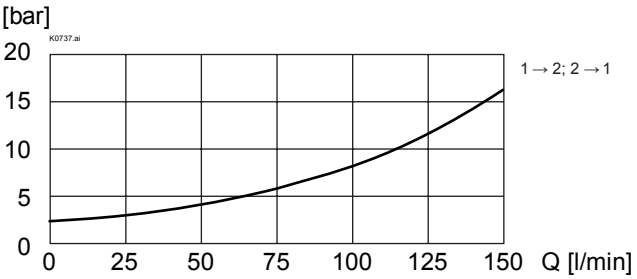

DIMENSIONS / SECTIONAL DRAWING

2/2-way version, «normally closed» [BC]

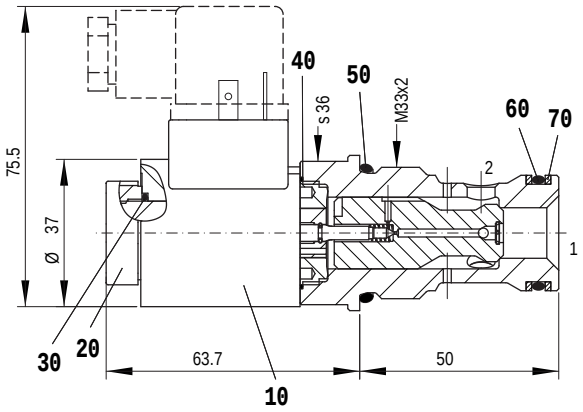

2/2-way version, «normally closed» [BA]

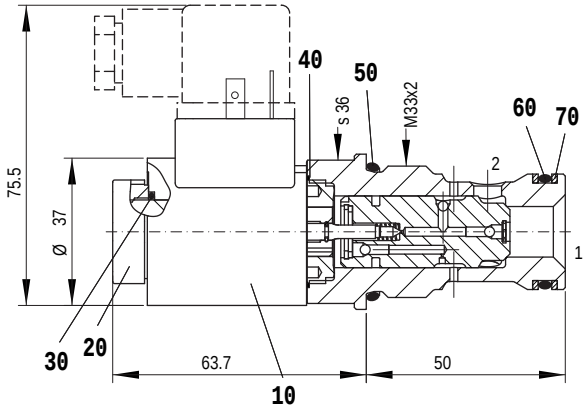

2/2-way version, «normally open» [CB]

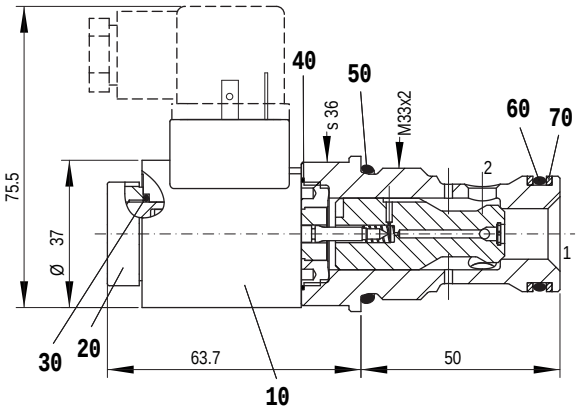

2/2-way version, «normally open» [AB]

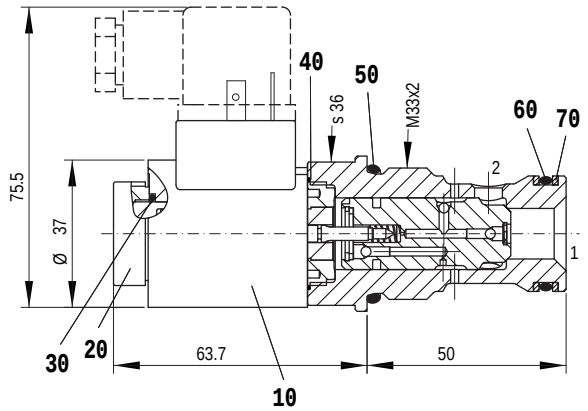

Dimensions of the other connection versions see data sheet 1.1.169 and 1.1-171

PARTS LIST

Position	Article	Description
10		EN 175301
	206.2213	Solenoid coil WDE37 / 16 x 40-G24
	206.2212	Solenoid coil WDE37 / 16 x 40-G12
		Junior-Timer
	206.2218	Solenoid coil WJE 37 / 16 x 40-G24
	206.2217	Solenoid coil WJE 37 / 16 x 40-G12
20	154.2600	Knurled nut
30	160.2156	O-ring ID 15,60 x 1,78 (NBR)
40	160.1260	O-ring ID 26,00 x 1,00 (NBR)
50	160.2298	O-ring ID 29,82 x 2,62 (NBR)
	160.6296	O-ring ID 29,82 x 2,62 (FMK)
60	160.2238	O-ring ID 23,81 x 2,6 (NBR)
	160.6238	O-ring ID 23,81 x 2,62 (FMK)
70	049.3297	Backup ring RD 24,5 x 29 x 1,4

ACCESSORIES

Cartridge built-in flange- or sandwich body:

Flange valve	register 1.11
Sandwich valve	register 1.11
Mating connector EN 175301-803	Article no. 219.2002

Technical explanation see data sheet 1.0-100