Poppet valve cartridges
2/2- and 3/2-way versions
- **direct operated**
- **Q_{max} = 40 l/min**
- **p_{max} = 350 bar**

M22x1,5
ISO 7789

II 2 G Ex d II C
II 2D Ex tD A21 IP65

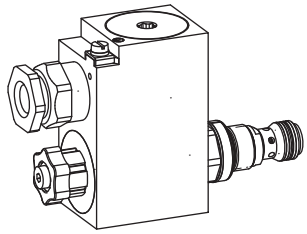

DESCRIPTION

Direct operated 2/2-way solenoid poppet valve in screw-in cartridge design with thread M22 x 1,5 for cavity acc. to ISO 7789.
Activated with Wandfluh explosion proof solenoid.
The solenoid coil is certified in accordance with:
ATEX (directive 94/9/EC)
IEC Ex
Gost Ex
The solenoid coil is encapsulated pressure-proof and designed for applications in the zones 1 + 2 (gas) as well as 21 + 22 (dust). In doing so, it fulfils the requirements of the gas group IIC and can be utilised up to the temperature class T6.
The zinc-/nickel coating serves as an excellent corrosion protection.
Details of the solenoid coil: refer to data sheet 1.1-183.

Type test certification:
ATEX: PTB 07 ATEX 1023
IEC Ex: 010.0020
Gost Ex: CH.HO06.B00365

INSTALLATION

For stack assembly please observe the remarks in the operating instructions.

FUNCTION

For the function «normally closed» with de-energised pull-type solenoid, and «normally open» with energised push-type solenoid, the differential area poppet piston is held in closed position by a spring and seals leak free from port 2 to 1. If pull-type solenoid is energised respectively push-type solenoid deenergised, the poppet piston will open flow passage from 2 to 1 after having reached the opening pressure. In the «normally closed» valve with deenergised solenoid respectively the «normally open» valve with energised solenoid flow passage from 1 to 2 is open when the opening pressure has been reached.

APPLICATION

Wandfluh solenoid operated poppet valves are applied where an absolutly leak free closing of the valve is essential like in load holding-, clamping- or gripping functions. These valves are suitable for hazardeous areas in off-shore and shipbuilding applications as well as in the chemical-, oil- and gas industry. The screw-in cartridges are mainly used in mobile or stationary integrated blocks and in size NG4-Mini and NG6 flange and sandwich bodies. To machine the cavities in steel or aluminium blocks, cavity tools may be supplied (hire or purchase). Please refer to the data sheets in register 2.13.

TYPE CODE

S D Y PM22 - ☐ / ☐ - ☐ # ☐

Poppet valve			
Direct operated			
Explosion proof solenoid EEx d			
Screw-in cartridge M22 x 1,5			
2/2-way, «normally closed»		BA	
2/2-way, «normally open»		AB	
3/2-way		FG	
Standard nominal voltage U_N:	12 VDC	G12	
	24 VDC	G24	
	115 VAC	R115	
	230 VAC	R230	
			Ambient temp by:
Nominal power P_N:	15 W	L15	70 °C
	21 W	L21	50 °C
Design-Index (Subject to change)			

GENERAL SPECIFICATIONS

Description	Direct operated 2/2- and 3/2-way solenoid poppet valve
Construction	Screw-in cartridge for cavity acc. to ISO 7789
Operation	Solenoid
Mounting	Screw-in thread M22 x 1,5
Admissible ambient temperature	Execution L15: -20…+70 °C (operation as T1…T4/T130 °C) Execution L21: -20…+50 °C (operation as T1…T4/T130 °C) In case of U_N < 20V, the max. ambient temperature has to be reduced by 10 °C.
Mounting position	any, preverable horizontal
Fastening torque	M_D = 50 Nm for cartridge M_D = 5 Nm for coil retaining nut
Weight	m = 2,25 kg 2/2-way m = 2,3 kg 3/2-way
Volume flow	see symbols

HYDRAULIC SPECIFICATIONS

Fluid	Mineral oil, other fluid on request
Contamination	ISO 4406:1999, classe 18/16/13
Verschmutzungsgrad	(Required filtration grade ß6…10≥75) see data sheet 1.0-50/2
Viscosity range	12 mm^2/s bis 320 mm^2/s
Admissible fluid temperature	Execution L15: -20…+70 °C (operation as T1…T4/T130 °C) Execution L21: -20…+50 °C (operation as T1…T4/T130 °C)
Working pressure	p_{max} = 350 bar
Nominal flow	Q_N = 20 l/min
Max. volume flow	Q_{max} = 40 l/min
Pressure drop	see characteristics
Opening pressure	1,4 bar

SYMBOLS

SDYPM22 - **BA**…

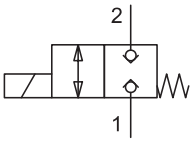

SDYPM22 - **AB**…

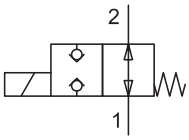

SDYPM22 - **FG**…

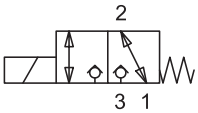

Transitional functions - **«FG»**…

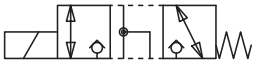

ELECTRICAL CONTROL

Construction	Switching solenoid, wet pin pull- or push type, pressure tight
Standard-nominal voltage	U_N = 12 VDC, U_N = 24 VDC U_N = 115 VAC, U_N = 230 VAC DC wired with VDR AC = 50 to 60 Hz ±2 %; with integrated two way rectifier and recovery diode
Voltage tolerance	±10 % of nominal voltage
Protection class	IP 65 acc. to EN 60529
Relative duty cycle	100% ED
Switching cycles	5 000/h
Operating life	10^7 (number of switching cycles, theoretically)
Connection / Power supply	Through cable entry for cable diameter ∅ 11…14 mm
Temperature class	acc. to EN 60079-0
Execution L15/L21:	T1…T4
Nominal power	
Execution L15:	15 W
Execution L21:	21 W

For further electrical characteristics, refer to the data sheet of the solenoid coil: 1.1-183

CHARACTERISTICS oil viscosity ν = 30 mm²/s

p = f (Q) Performance limit at –10 %
2/2-way type (measured at 50 °C)

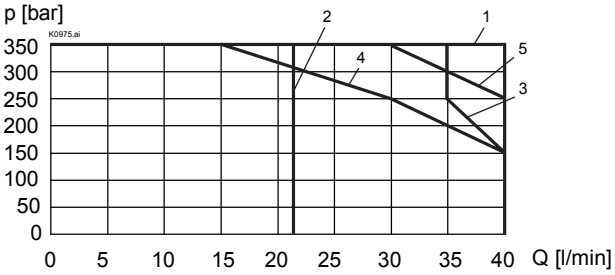

	Flow direction	
Version	1 → 2	2 → 1
SDYPM22-BA-L21	1	1
SDYPM22-AB-L21	2	1
SDYPM22-BA-L15	4	3
SDYPM22-AB-L15	2	5

p = f (Q) Performance limit at –10 %
3/2-way type [FG] (measured at 50 °C)

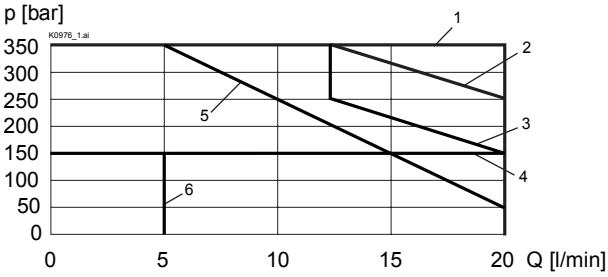

	Flow direction			
Version	1 → 2	2 → 1	2 → 3	3 → 2
SDYPM22-FG-L21	3	1	1	2
SDYPM22-FG-L15	5	1	4	6

Δp = f (Q) Pressure volume flow characteristics

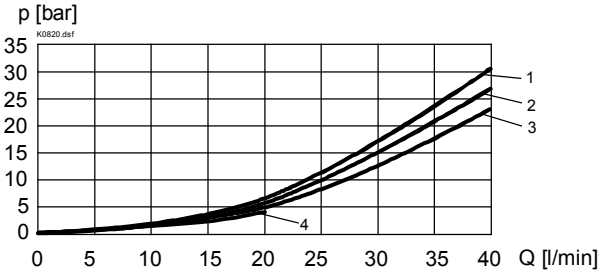

	Flow direction			
Version	1 → 2	2 → 1	2 → 3	3 → 2
SDYPM22-BA-…	1	2	-	-
SDYPM22-AB-…	3	4	-	-
SDYPM22-FG-…	-	4	1	1

START-UP

Information for the installation and commissioning can be obtained from the operating instructions of the solenoid coil supplied with it.

DIMENSIONS / SECTIONAL DRAWING

2/2-way, «normally closed» [BA]

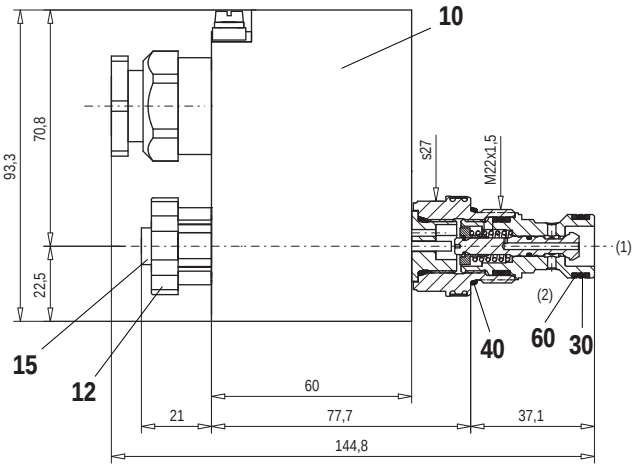

2/2-way, «normally open» [AB]

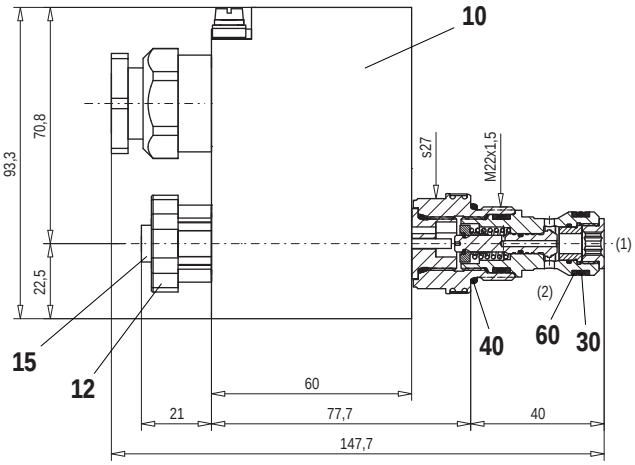

CAVITY

Cavity drawing for 2/2-way version to ISO 7789–22–01–0–98

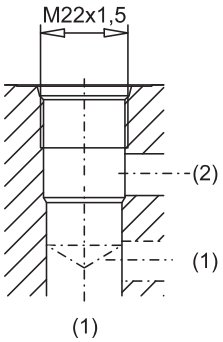

For detailed cavity drawing and cavity tools see data sheet 2.13-1008

DIMENSIONS / SECTIONAL DRAWING

3/2-way version

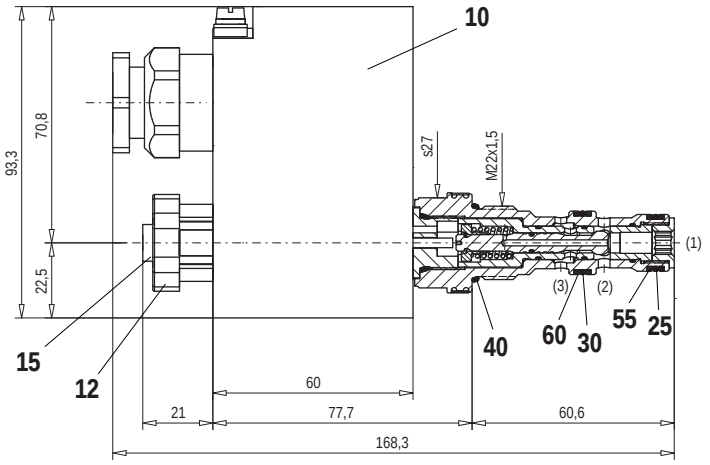

CAVITY

Cavity drawing for 3/2-way version to
ISO 7789–22–04–0–98

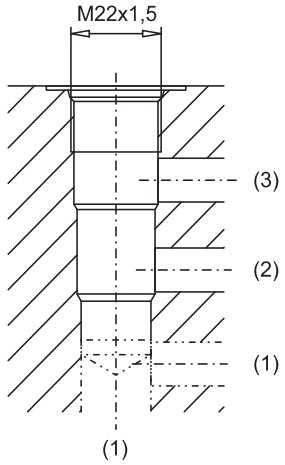

For detailed cavity drawing and cavity tools
see data sheet 2.13-1004

PARTS LIST

Position	Article	Description
10	263.6…	Coil type MKY 45/18 x 60...
12	154.2601	Knurled nut M16 x 1 x 18
15	239.2033	Plug HB0 (incl. Seal)
25	160.2140	O-ring ID 14,00 x 1,78
30	160.2156	O-ring ID 15,60 x 1,78
40	160.2188	O-ring ID 18,77 x 1,78
55	049.3176	Back-up ring RD 14,1 x 17 x 1,4
60	049.3196	Back-up ring RD 16,1 x 19 x 1,4

ACCESSORIES

Cartridge built-in flange- or sandwich body:

Flange valve	register 1.11
Sandwich valve	register 1.11

Technical explanation see data sheet 1.0-100